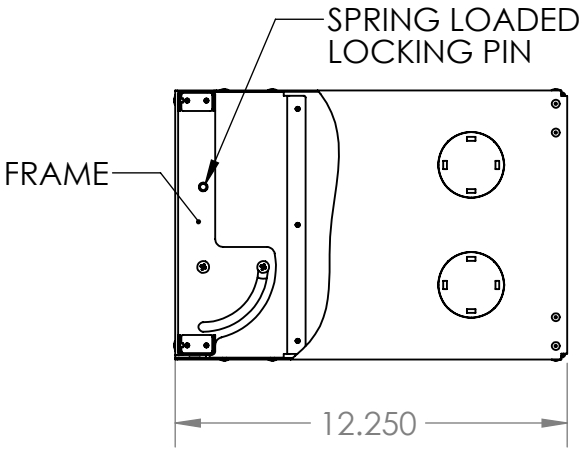

SHOWN IN LOCKED POSITION,
FRAME UP

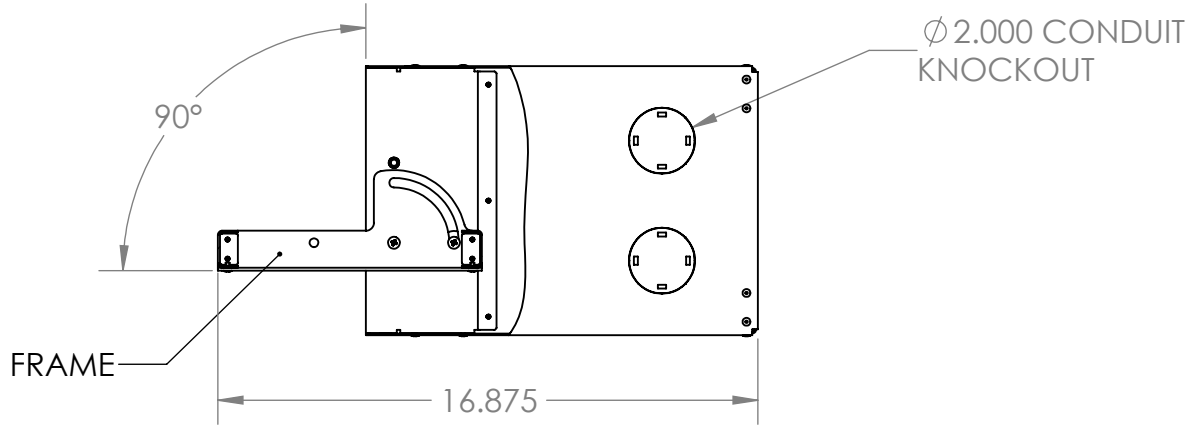

SHOWN IN UNLOCKED POSITION,
FRAME DOWN

VIEW A-A
SCALE 1 : 6

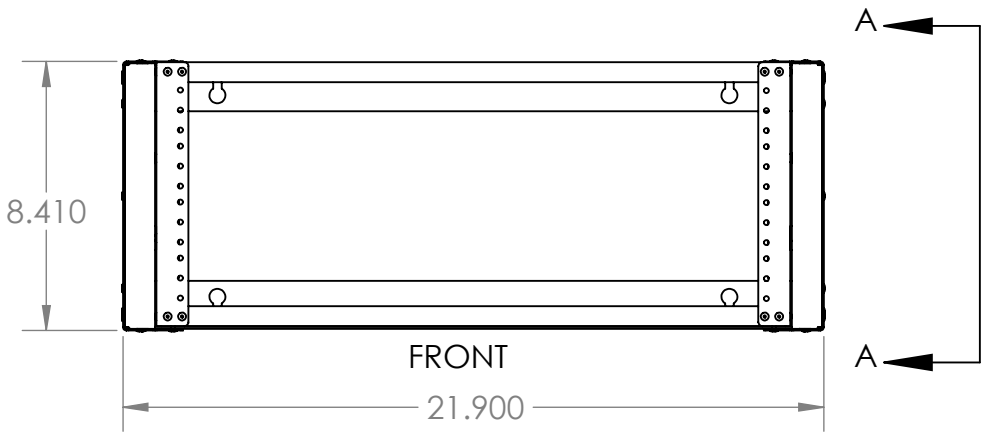

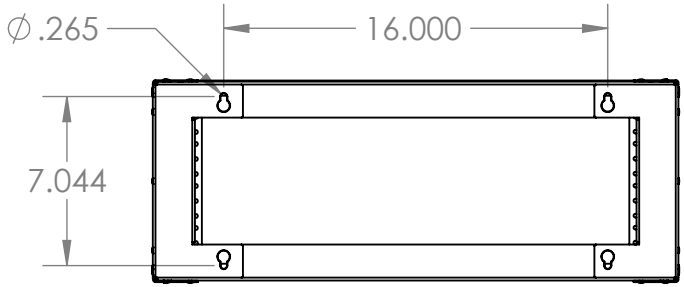

REAR

NOTE:
1. 19" EIA RACK MOUNT COMPLIANT.
2. RAILS ARE THREADED, 10-32.
3. MAXIMUM COMPONENT DEPTH, WITHOUT CABLING, 12.00".
4. BLACK POWDER COAT.

WEB PRINT

NEXT ASSY	USED ON
APPLICATION	

PROPRIETARY AND CONFIDENTIAL
THE INFORMATION CONTAINED IN THIS DRAWING IS THE SOLE PROPERTY OF KENDALL HOWARD. ANY REPRODUCTION IN PART OR AS A WHOLE WITHOUT THE WRITTEN PERMISSION OFKENDALL HOWARD IS STRICTLY PROHIBITED.

UNLESS OTHERWISE SPECIFIED:
DIMENSIONS ARE IN INCHES
TOLERANCES:
FRACTIONAL ±1/8
ANGULAR: BEND ±1DEGREE
TWO PLACE DECIMAL ±.03
THREE PLACE DECIMAL ±.01

Surface Area

MATERIAL

FINISH

DO NOT SCALE DRAWING

	NAME	DATE
DRAWN	JL	3/12/2014
CHECKED		
ENG APPR.		
MFG APPR.		
Q.A.		

COMMENTS:

KENDALL HOWARD™

TITLE:
4U PIVOT FRAME WALL MOUNT RACK

SIZE	DWG. NO.	REV
A	1915-3-400-04 WP	-

SCALE: 1:10 | WEIGHT: 9.89 | SHEET 1 OF 1

5 4 3 2 1