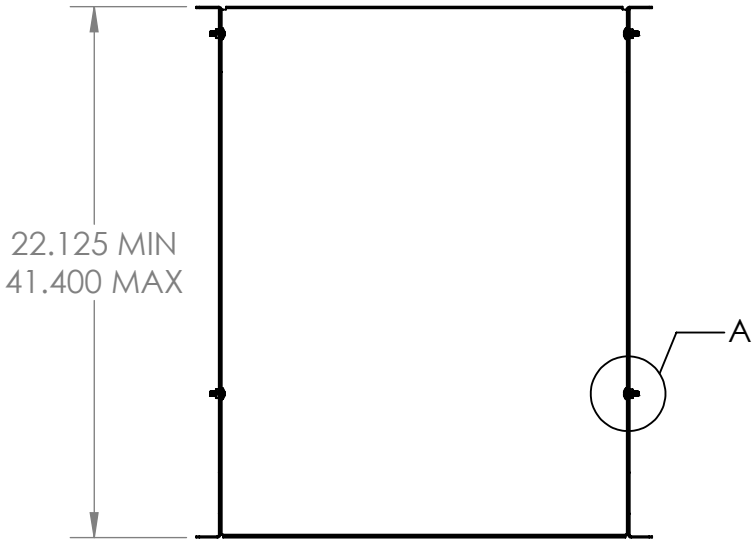

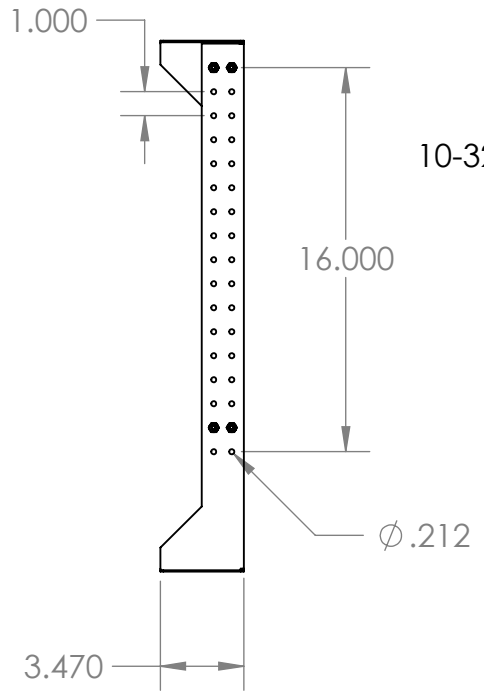

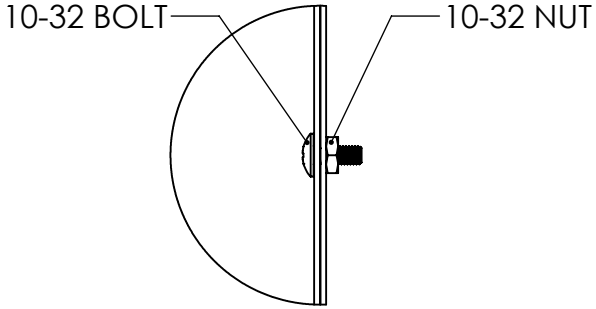

DETAIL A
SCALE 1 : 2

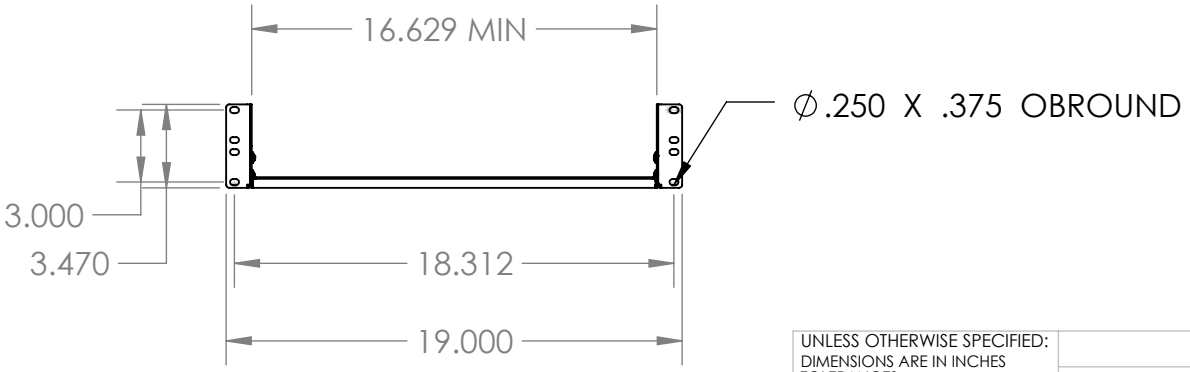

NOTE:
1. BLACK POWDER COAT.
2. ASSEMBLY HARDWARE INCLUDED

WEB PRINT

NEXT ASSY	USED ON
CATEGORY:	

PROPRIETARY AND CONFIDENTIAL
THE INFORMATION CONTAINED IN THIS DRAWING IS THE SOLE PROPERTY OF KENDALL HOWARD. ANY REPRODUCTION IN PART OR AS A WHOLE WITHOUT THE WRITTEN PERMISSION OF KENDALL HOWARD IS STRICTLY PROHIBITED.

UNLESS OTHERWISE SPECIFIED:
DIMENSIONS ARE IN INCHES
TOLERANCES:
FRACTIONAL: NA
ANGULAR: BEND: NA
TWO PLACE DECIMAL: NA
THREE PLACE DECIMAL: NA
HOLES: NA

SURFACE AREA

MATERIAL

FINISH

DO NOT SCALE DRAWING

	NAME	DATE
DRAWN	JL	11/15/2016
CHECKED		
ENG APPR.		
MFG APPR.		
Q.A.		

COMMENTS:

KENDALL HOWARD

TITLE:
2U 4 POINT ADJUSTABLE SHELF

SIZE	DWG. NO.	REV
A	1906-3-006-02 WP	-
SCALE: 1:8	WEIGHT: 15.52	SHEET 1 OF 1

5 4 3 2 1