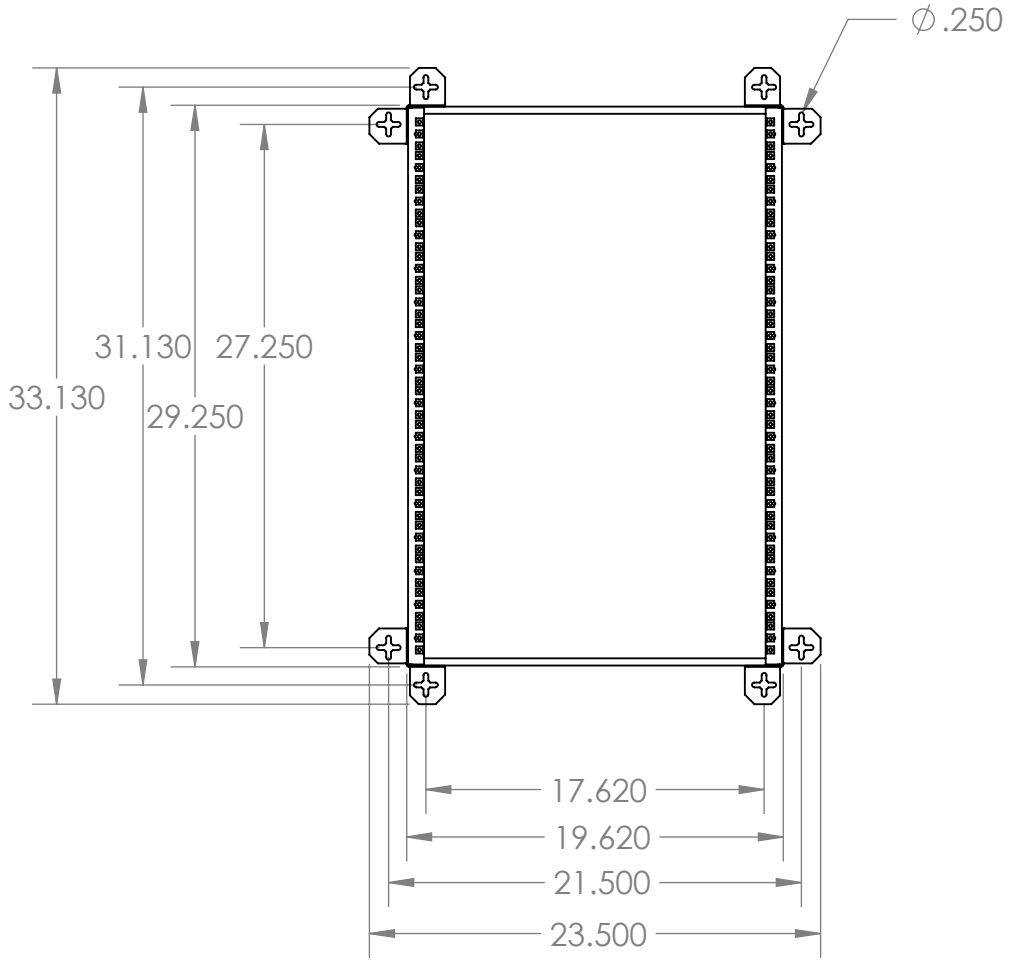

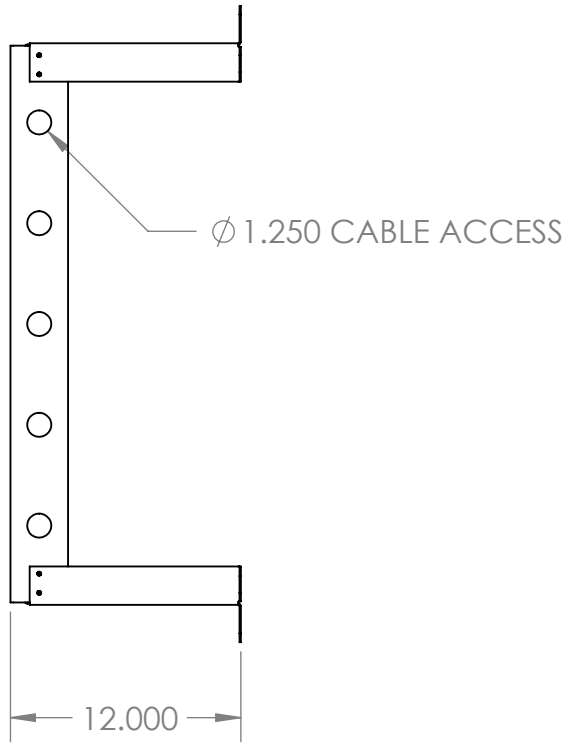

NOTE:

1. 19" EIA RACK MOUNT COMPLIANT.
2. VERTICAL RAILS CAN BE ASSEMBLED FOR 3/8" CAGE NUT OR 10-32 THREADED HOLE
3. BLACK POWDER COAT.
4. ASSEMBLY REQUIRED.

WEB PRINT

PROPRIETARY AND CONFIDENTIAL
THE INFORMATION CONTAINED IN THIS DRAWING IS THE SOLE PROPERTY OF KENDALL HOWARD. ANY REPRODUCTION IN PART OR AS A WHOLE WITHOUT THE WRITTEN PERMISSION OFKENDALL HOWARD IS STRICTLY PROHIBITED.

NEXT ASSY	USED ON
APPLICATION	

UNLESS OTHERWISE SPECIFIED:
DIMENSIONS ARE IN INCHES
TOLERANCES:
FRACTIONAL ±1/8
ANGULAR: BEND ±1DEGREE
TWO PLACE DECIMAL ±.03
THREE PLACE DECIMAL ±.01

Surface Area

MATERIAL

FINISH

DO NOT SCALE DRAWING

	NAME	DATE
DRAWN	BS	03/17/2014
CHECKED		
ENG APPR.		
MFG APPR.		
Q.A.		

COMMENTS:

KENDALL HOWARD

TITLE:

16U V-LINE WALL MOUNT RACK

SIZE	DWG. NO.	REV
A	1915-3-300-16 WP	A

SCALE: 1:10 | WEIGHT: 9.64 | SHEET 1 OF 1

5 4 3 2 1